"RICH" Scaler Logic 2002-3 run

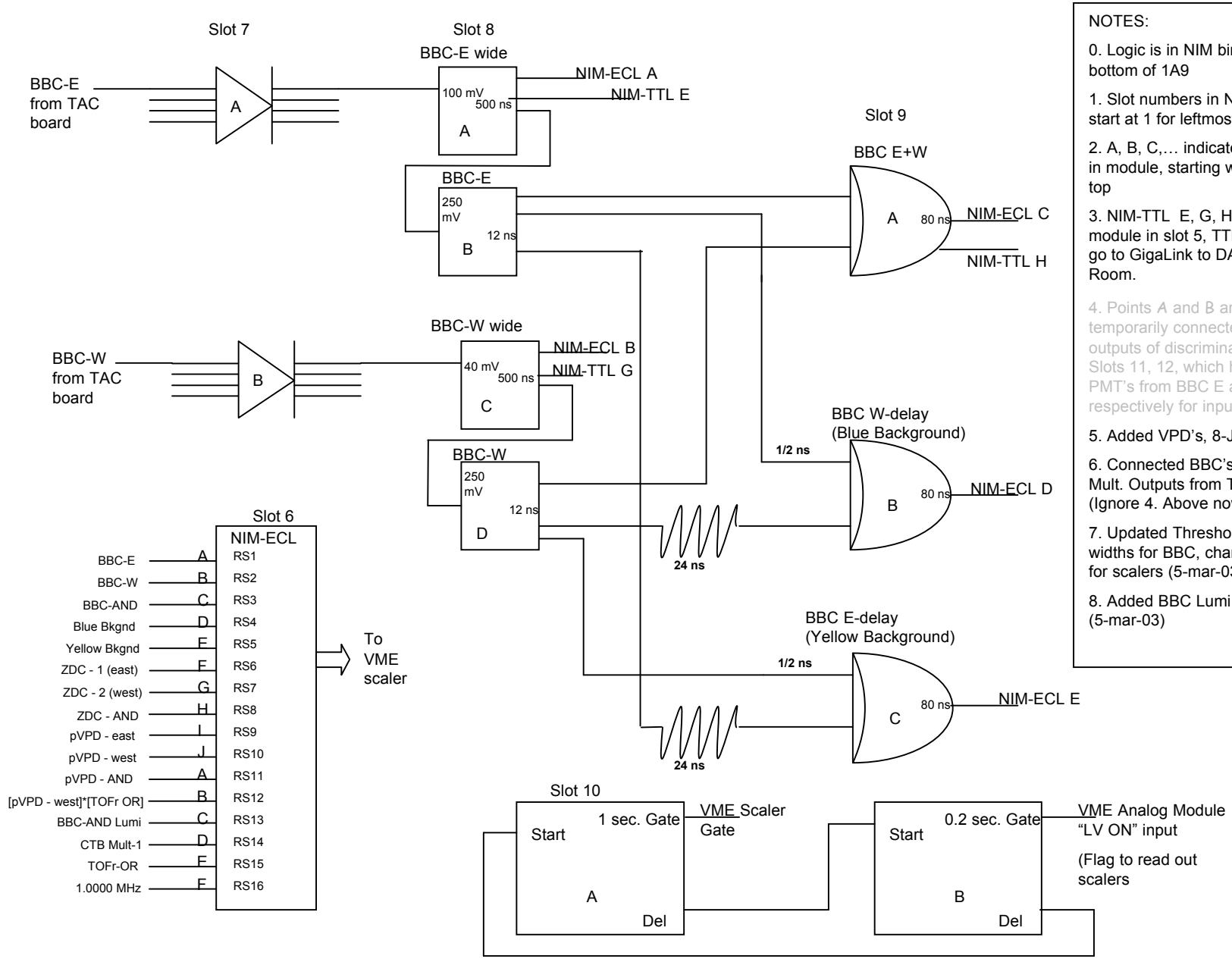

NOTES:

0. Logic is in NIM bin in bottom of 1A9

1. Slot numbers in NIM BIN start at 1 for leftmost slot

2. A, B, C,… indicate channel in module, starting with A at top

3. NIM-TTL E, G, H are in module in slot 5, TTL outputs go to GigaLink to DAQ Room.

4. Points A and B are temporarily connected to Σ outputs of discriminators in Slots 11, 12, which have six PMT's from BBC E and W respectively for inputs.

5. Added VPD's, 8-Jan-2003

6. Connected BBC's back to Mult. Outputs from TAC (Ignore 4. Above now)

7. Updated Thresholds, widths for BBC, chan. Labels for scalers (5-mar-03)

8. Added BBC Lumi logic (5-mar-03)

BBC Luminosity Scaler Logic

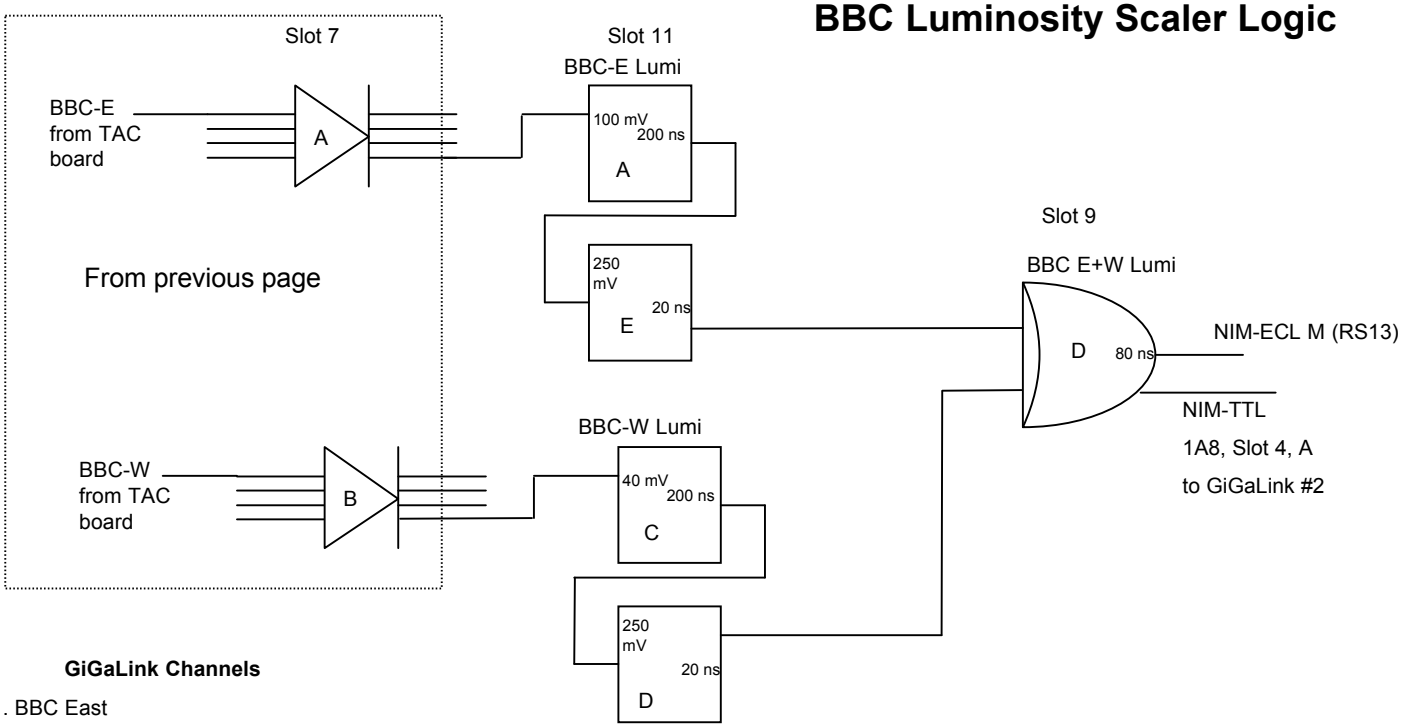

GiGaLink Channels

1. BBC East
2. BBC-AND Lumi
3. BBC West
4.
5. BBC-AND
6.
7. BBC W-del (Blue Bkgnd)
8.
9. BBC E-del (Yellow Bkgnd)