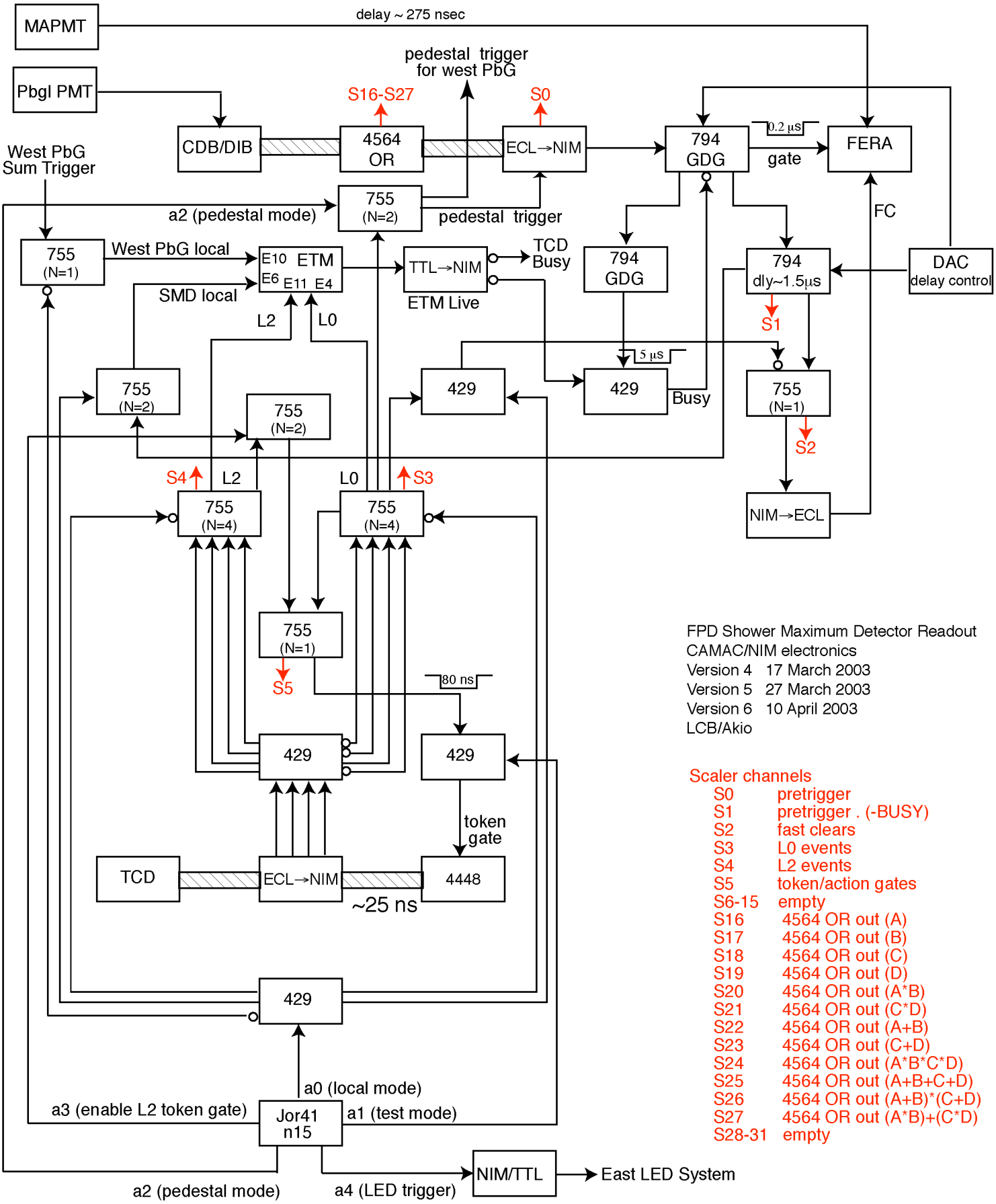

FPD Shower Maximum Detector Readout
CAMAC/NIM electronics
Version 4 17 March 2003
Version 5 27 March 2003
Version 6 10 April 2003
LCB/Akio

Scaler channels

S0	pretrigger
S1	pretrigger . (-BUSY)
S2	fast clears
S3	L0 events
S4	L2 events
S5	token/action gates
S6-15	empty
S16	4564 OR out (A)
S17	4564 OR out (B)
S18	4564 OR out (C)
S19	4564 OR out (D)
S20	4564 OR out (A*B)
S21	4564 OR out (C*D)
S22	4564 OR out (A+B)
S23	4564 OR out (C+D)
S24	4564 OR out (A*B*C*D)
S25	4564 OR out (A+B+C+D)
S26	4564 OR out (A+B)*(C+D)
S27	4564 OR out (A*B)+(C*D)
S28-31	empty