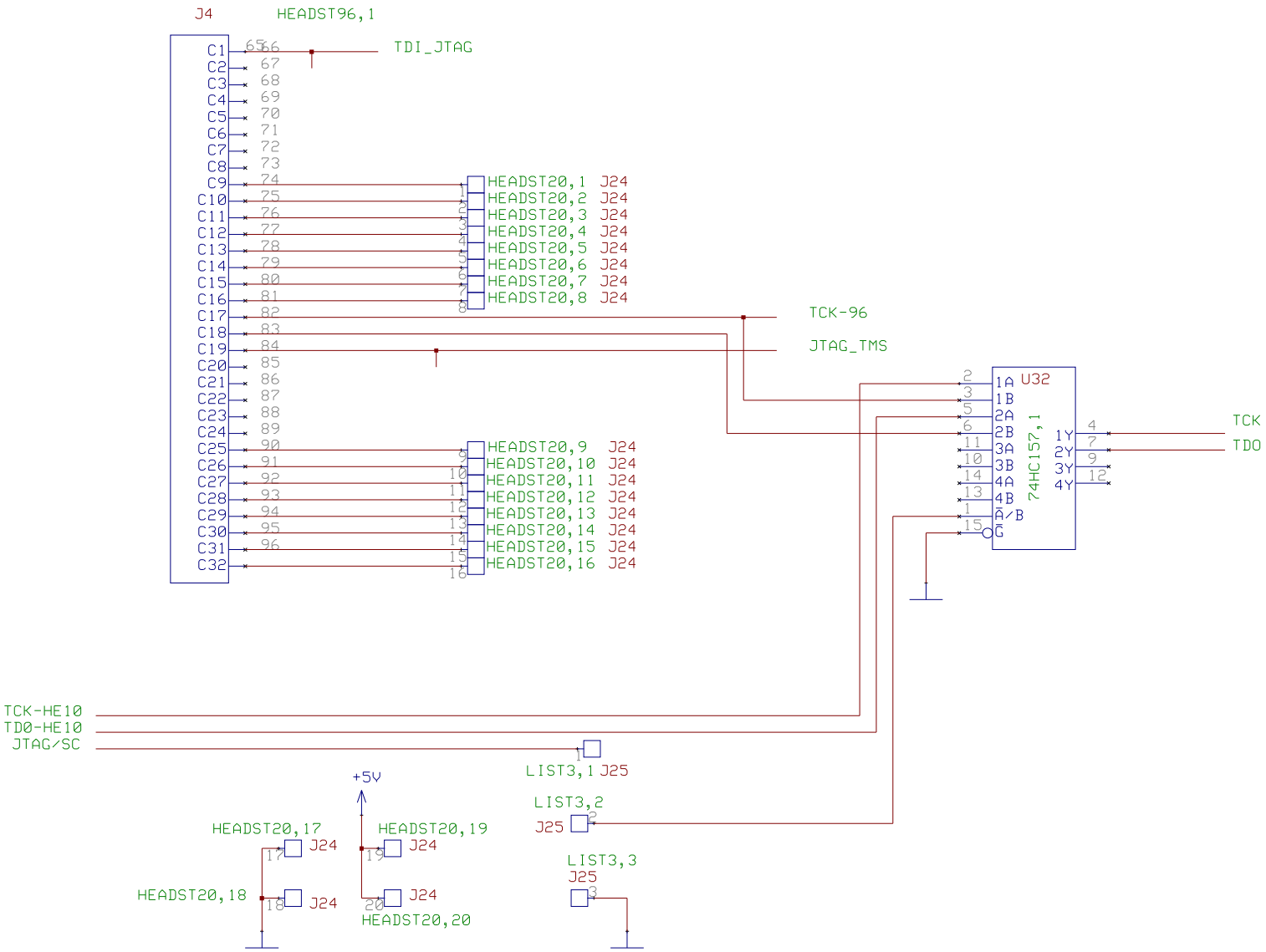
J4
HEADST96,1
TDI_JTAG
HEADST20,1 J24
HEADST20,2 J24
HEADST20,3 J24
HEADST20,4 J24
HEADST20,5 J24
HEADST20,6 J24
HEADST20,7 J24
HEADST20,8 J24
TCK-96
JTAG_TMS
HEADST20,9 J24
HEADST20,10 J24
HEADST20,11 J24
HEADST20,12 J24
HEADST20,13 J24
HEADST20,14 J24
HEADST20,15 J24
HEADST20,16 J24
U32
74HC157,1
TCK
TDO
TCK-HE10
TDO-HE10
JTAG/SC
LIST3,1 J25
+5V
LIST3,2
J25
HEADST20,17
J24
HEADST20,19
J24
HEADST20,18
J24
J24
HEADST20,20
LIST3,3
J25