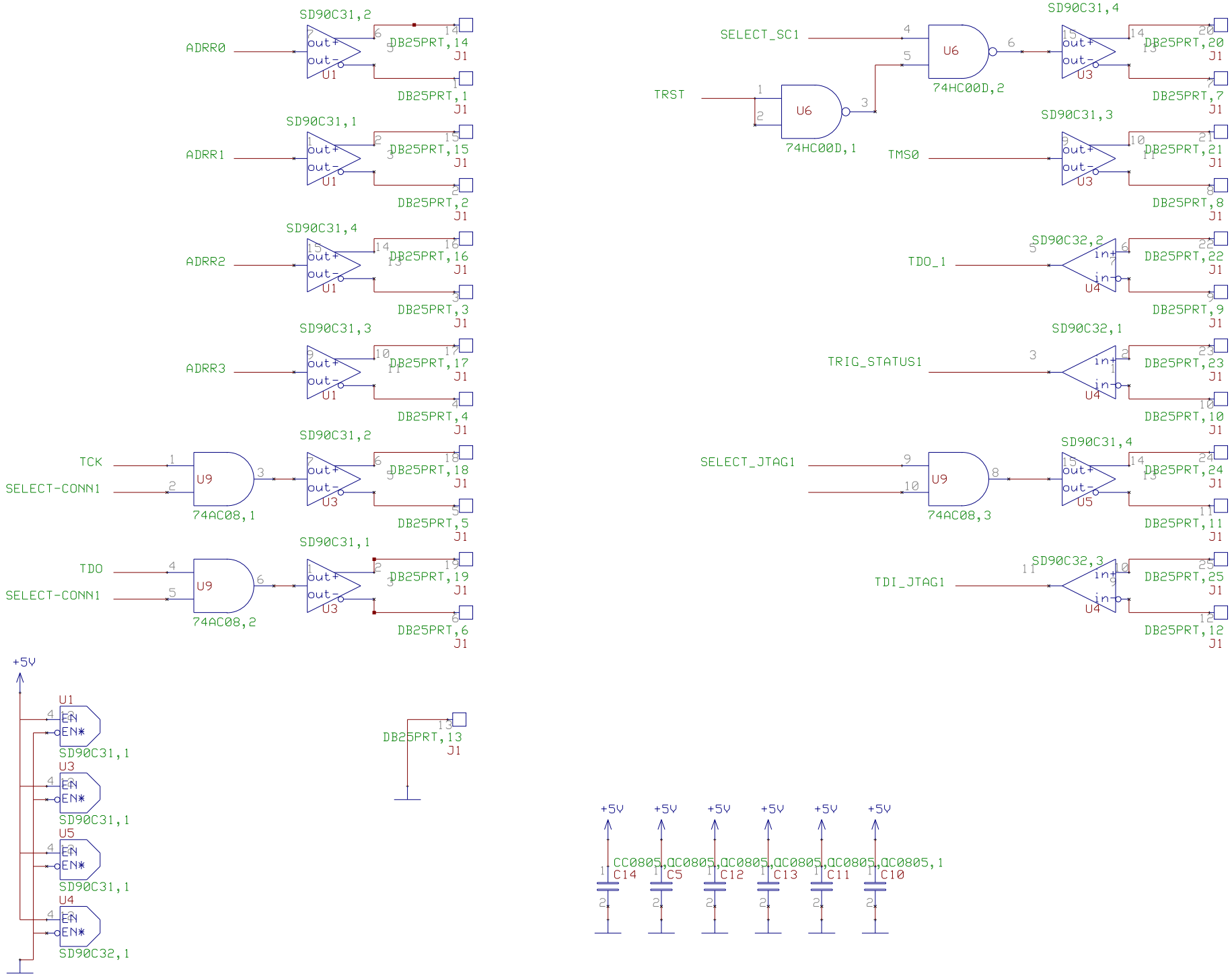
ADRR0
SD90C31,2
U1
DB25PRT,14
J1
DB25PRT,1
J1
ADRR1
SD90C31,1
U1
DB25PRT,15
J1
DB25PRT,2
J1
ADRR2
SD90C31,4
U1
DB25PRT,16
J1
DB25PRT,3
J1
ADRR3
SD90C31,3
U1
DB25PRT,17
J1
DB25PRT,4
J1
TCK
SELECT-CONN1
U9
74AC08,1
SD90C31,2
U3
DB25PRT,18
J1
DB25PRT,5
J1
TDO
SELECT-CONN1
U9
74AC08,2
SD90C31,1
U3
DB25PRT,19
J1
DB25PRT,6
J1
SELECT_SC1
U6
74HC00D,2
SD90C31,4
U3
DB25PRT,20
J1
DB25PRT,7
J1
TRST
U6
74HC00D,1
TMS0
SD90C31,3
U3
DB25PRT,21
J1
DB25PRT,8
J1
TDO_1
SD90C32,2
U4
DB25PRT,22
J1
DB25PRT,9
J1
TRIG_STATUS1
SD90C32,1
U4
DB25PRT,23
J1
DB25PRT,10
J1
SELECT_JTAG1
U9
74AC08,3
SD90C31,4
U5
DB25PRT,24
J1
DB25PRT,11
J1
TDI_JTAG1
SD90C32,3
U4
DB25PRT,25
J1
DB25PRT,12
J1
+5V
U1
SD90C31,1
U3
SD90C31,1
U5
SD90C31,1
U4
SD90C32,1
DB25PRT,13
J1
+5V
CC0805,C0805,C0805,C0805,C0805,C0805,1
C14
C5
C12
C13
C11
C10