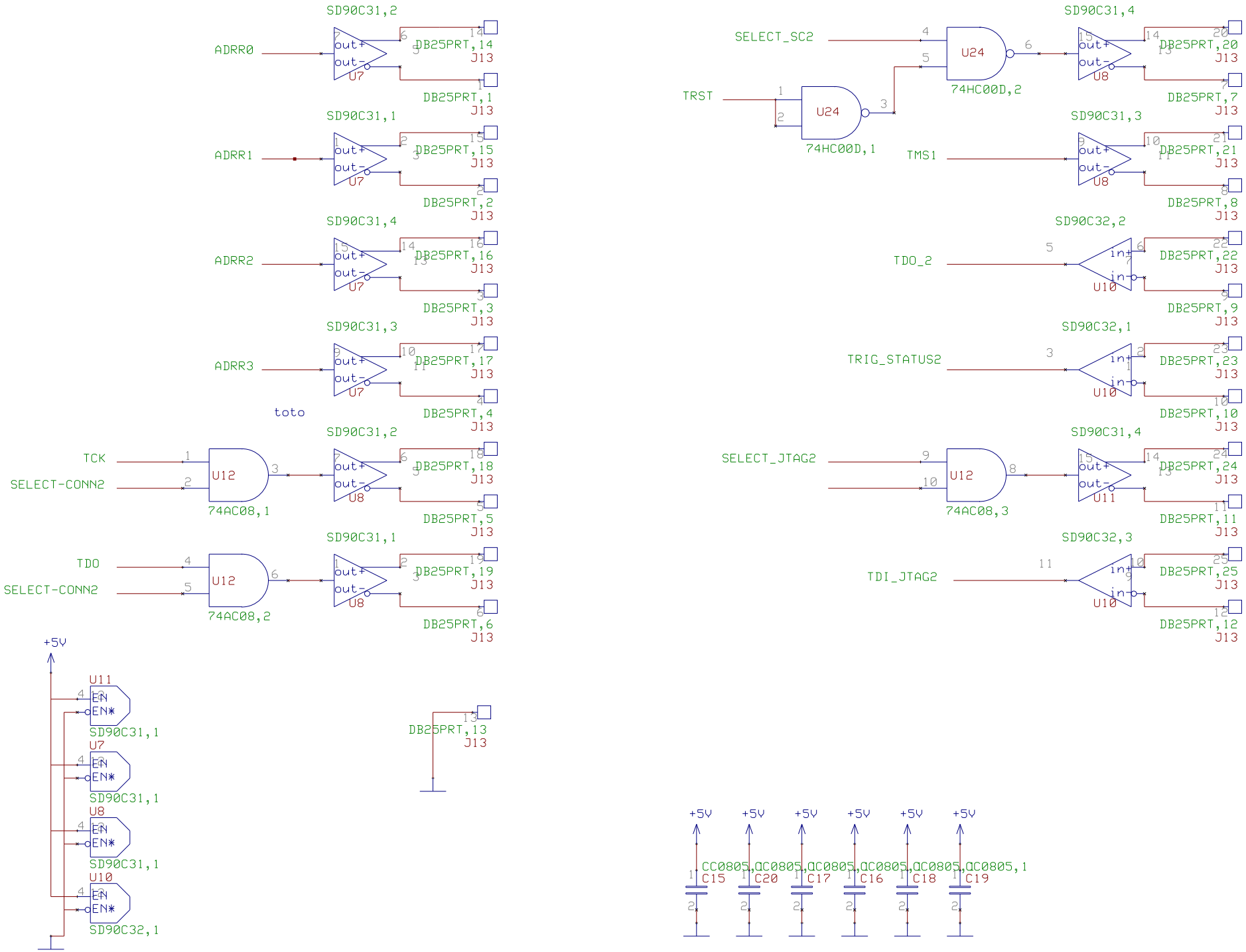
SD90C31,2
ADRR0
out+
out-
U7
DB25PRT,14
J13
DB25PRT,1
J13
SD90C31,1
ADRR1
DB25PRT,15
DB25PRT,2
SD90C31,4
ADRR2
DB25PRT,16
DB25PRT,3
SD90C31,3
ADRR3
DB25PRT,17
DB25PRT,4
toto
TCK
SELECT-CONN2
U12
74AC08,1
U8
DB25PRT,18
DB25PRT,5
TDO
74AC08,2
DB25PRT,19
DB25PRT,6
SELECT_SC2
U24
74HC00D,2
DB25PRT,20
DB25PRT,7
TRST
74HC00D,1
TMS1
DB25PRT,21
DB25PRT,8
SD90C32,2
TDO_2
in+
in-
U10
DB25PRT,22
DB25PRT,9
SD90C32,1
TRIG_STATUS2
DB25PRT,23
DB25PRT,10
SELECT_JTAG2
74AC08,3
U11
DB25PRT,24
DB25PRT,11
SD90C32,3
TDI_JTAG2
DB25PRT,25
DB25PRT,12
+5V
EN
EN*
SD90C31,1
SD90C32,1
DB25PRT,13
J13
CC0805,C0805,C0805,C0805,C0805,C0805,1
C15
C20
C17
C16
C18
C19