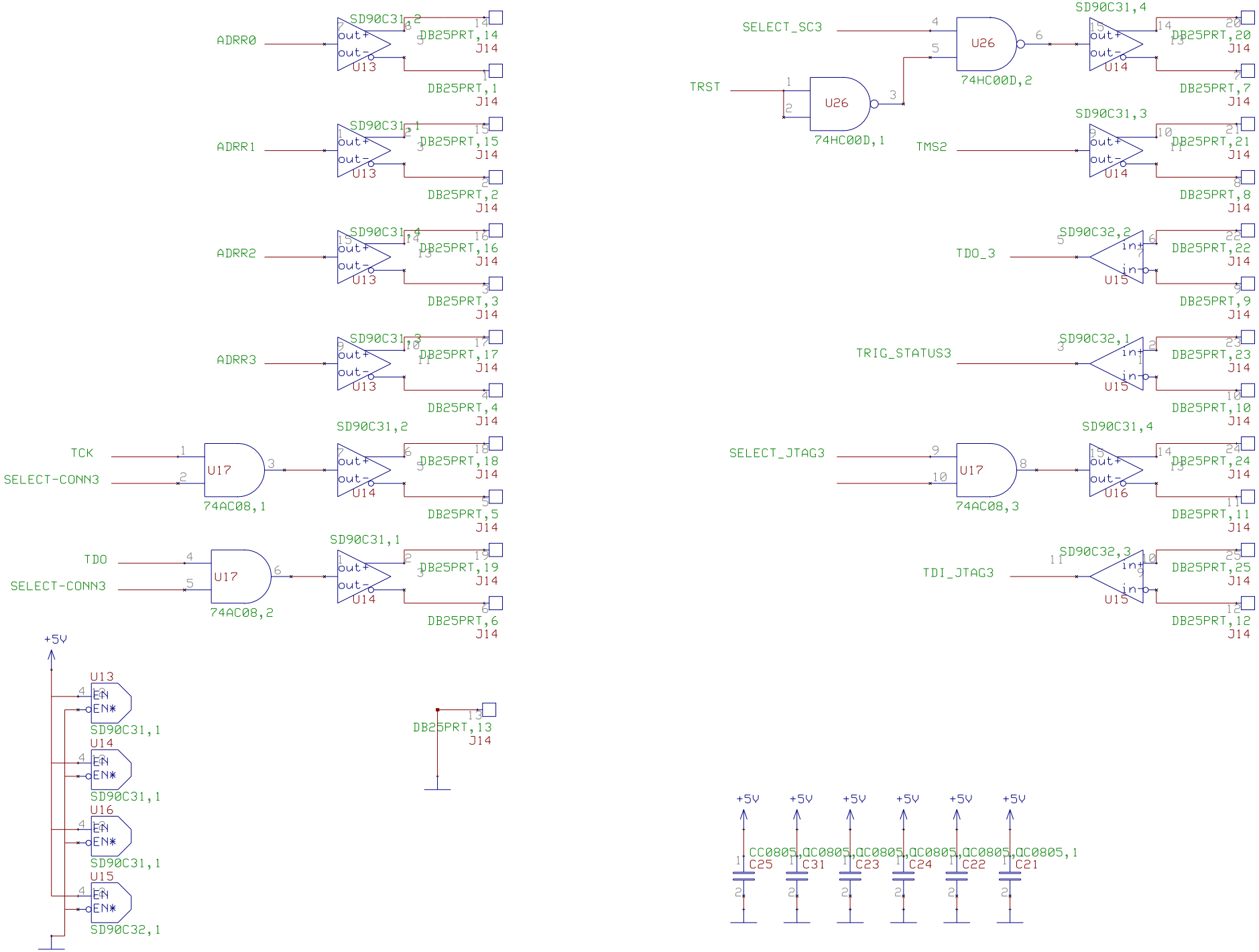
ADRR0
SD90C31,2
U13
DB25PRT,14
J14
DB25PRT,1
J14
ADRR1
SD90C31,1
U13
DB25PRT,15
J14
DB25PRT,2
J14
ADRR2
SD90C31,4
U13
DB25PRT,16
J14
DB25PRT,3
J14
ADRR3
SD90C31,3
U13
DB25PRT,17
J14
DB25PRT,4
J14
TCK
SELECT-CONN3
U17
74AC08,1
SD90C31,2
U14
DB25PRT,18
J14
DB25PRT,5
J14
TDO
SELECT-CONN3
U17
74AC08,2
SD90C31,1
U14
DB25PRT,19
J14
DB25PRT,6
J14
+5V
U13
EN
EN*
SD90C31,1
U14
SD90C31,1
U16
SD90C31,1
U15
SD90C32,1
DB25PRT,13
J14
SELECT_SC3
U26
74HC00D,2
SD90C31,4
U14
DB25PRT,20
J14
DB25PRT,7
J14
TRST
U26
74HC00D,1
TMS2
SD90C31,3
U14
DB25PRT,21
J14
DB25PRT,8
J14
TDO_3
SD90C32,2
U15
DB25PRT,22
J14
DB25PRT,9
J14
TRIG_STATUS3
SD90C32,1
U15
DB25PRT,23
J14
DB25PRT,10
J14
SELECT_JTAG3
U17
74AC08,3
SD90C31,4
U16
DB25PRT,24
J14
DB25PRT,11
J14
TDI_JTAG3
SD90C32,3
U15
DB25PRT,25
J14
DB25PRT,12
J14
+5V
CC0805,1
C25
C31
C23
C24
C22
C21