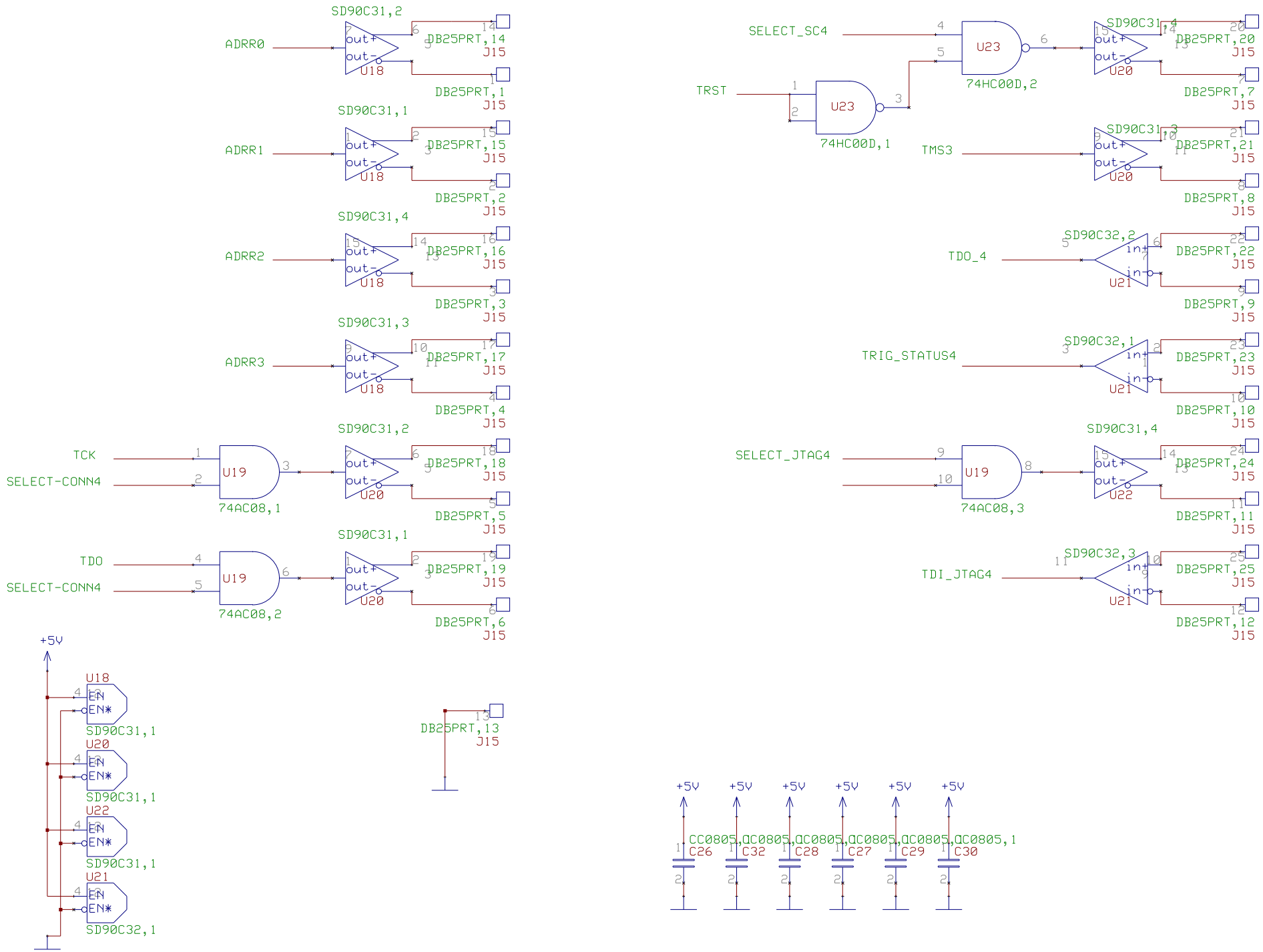
SD90C31,2
ADRR0
out+
out-
U18
DB25PRT,14
J15
DB25PRT,1
J15
SD90C31,1
ADRR1
DB25PRT,15
DB25PRT,2
SD90C31,4
ADRR2
DB25PRT,16
DB25PRT,3
SD90C31,3
ADRR3
DB25PRT,17
DB25PRT,4
TCK
SELECT-CONN4
U19
74AC08,1
U20
DB25PRT,18
DB25PRT,5
TDO
74AC08,2
DB25PRT,19
DB25PRT,6
SELECT_SC4
U23
74HC00D,2
TRST
74HC00D,1
DB25PRT,20
DB25PRT,7
TMS3
DB25PRT,21
DB25PRT,8
TDO_4
SD90C32,2
in+
in-
U21
DB25PRT,22
DB25PRT,9
TRIG_STATUS4
SD90C32,1
DB25PRT,23
DB25PRT,10
SELECT_JTAG4
74AC08,3
U22
DB25PRT,24
DB25PRT,11
TDI_JTAG4
SD90C32,3
DB25PRT,25
DB25PRT,12
+5V
EN
EN*
DB25PRT,13
CC0805,1
C26
C32
C28
C27
C29
C30