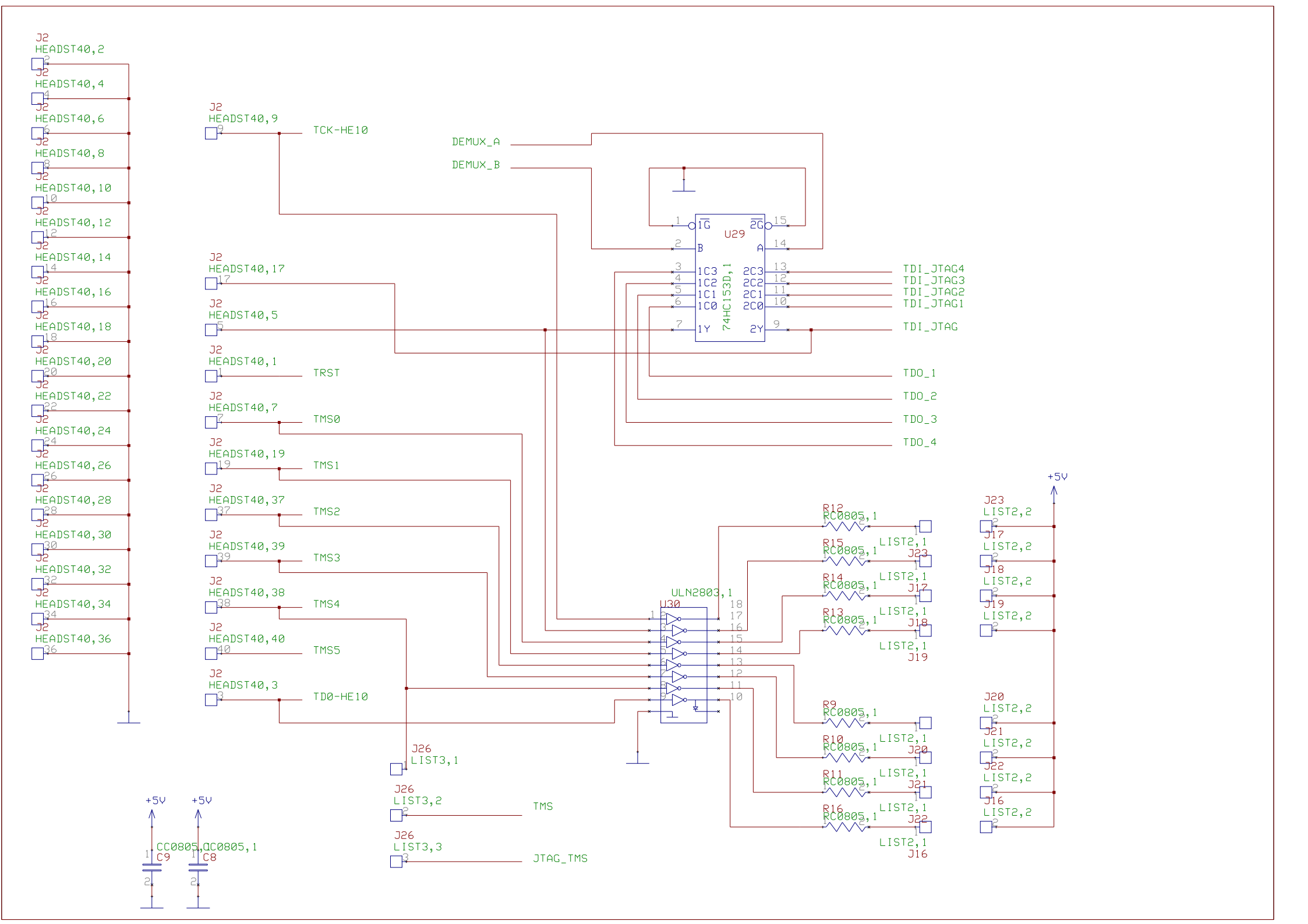
J2 HEADST40,2
J2 HEADST40,4
J2 HEADST40,6
J2 HEADST40,8
J2 HEADST40,10
J2 HEADST40,12
J2 HEADST40,14
J2 HEADST40,16
J2 HEADST40,18
J2 HEADST40,20
J2 HEADST40,22
J2 HEADST40,24
J2 HEADST40,26
J2 HEADST40,28
J2 HEADST40,30
J2 HEADST40,32
J2 HEADST40,34
J2 HEADST40,36
J2 HEADST40,9
TCK-HE10
DEMUX_A
DEMUX_B
U29
74HC153D,1
1G
2G
B
A
1C3
1C2
1C1
1C0
1Y
2C3
2C2
2C1
2C0
2Y
TDI_JTAG4
TDI_JTAG3
TDI_JTAG2
TDI_JTAG1
TDI_JTAG
TDO_1
TDO_2
TDO_3
TDO_4
J2 HEADST40,17
J2 HEADST40,5
J2 HEADST40,1
TRST
J2 HEADST40,7
TMS0
J2 HEADST40,19
TMS1
J2 HEADST40,37
TMS2
J2 HEADST40,39
TMS3
J2 HEADST40,38
TMS4
J2 HEADST40,40
TMS5
J2 HEADST40,3
TD0-HE10
ULN2803,1
U30
J26 LIST3,1
J26 LIST3,2
TMS
J26 LIST3,3
JTAG_TMS
+5V
+5V
CC0805,1
C9
CC0805,1
C8
R12 RC0805,1
R15 RC0805,1
R14 RC0805,1
R13 RC0805,1
R9 RC0805,1
R10 RC0805,1
R11 RC0805,1
R16 RC0805,1
LIST2,1 J23
LIST2,1 J17
LIST2,1 J18
LIST2,1 J19
LIST2,1 J20
LIST2,1 J21
LIST2,1 J22
LIST2,1 J16
+5V
J23 LIST2,2
J17 LIST2,2
J18 LIST2,2
J19 LIST2,2
J20 LIST2,2
J21 LIST2,2
J22 LIST2,2
J16 LIST2,2