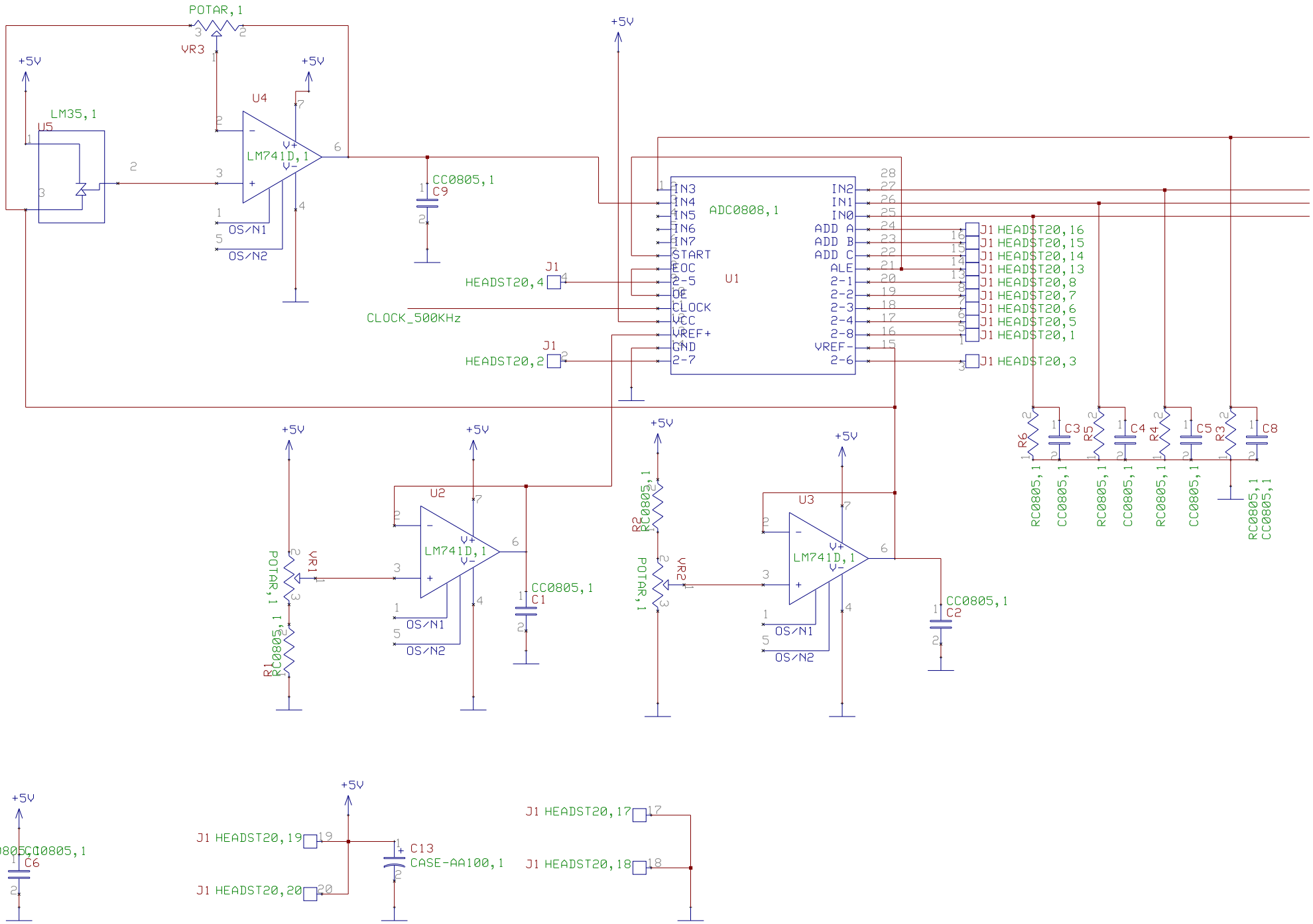STAR COOLING