REV	DWN	CHK	DATE	CHANGES
B	HWT	GSM	5/30/97	CHANGED TOLERANCES
C	WJL	GWE	5/20 1999	CHANGED 3 DIMENSIONS

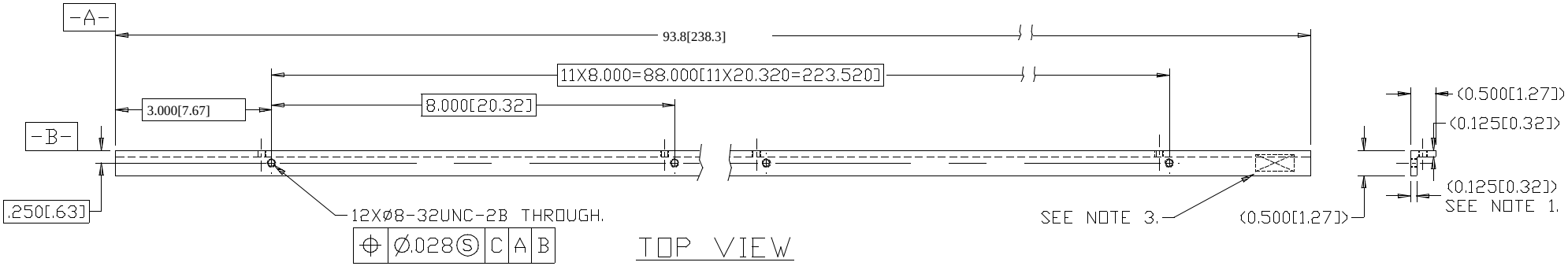

TOP VIEW

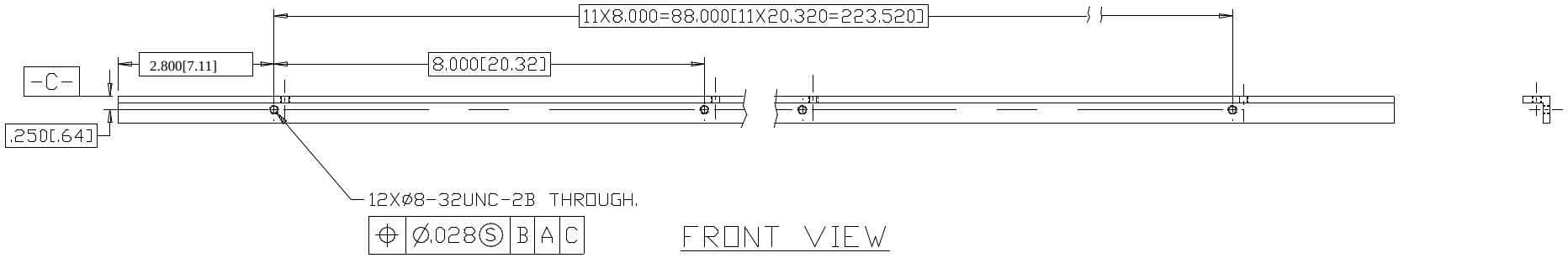

FRONT VIEW

NOTES:
1) MATERIAL: .500"X.500"X.125" ALUMINUM ANGLE STOCK.
2) PARTS TO BE DEGREASED
3) PARTS TO BE STAMPED WITH "LT" USING CHARACTERS .250" HIGH AND BLACK EPOXY INK, LOCATE APPROXIMATELY AS SHOWN.

STAR DRAWING #	REV	RHIC DRAWING #
TRG005-A-1	C	

BL DRAWING # CTB-M-155	REV. C	WBS	
DWN BY	HWT	DATE	1/27/97
COG. ENG.	GSM	DATE	1/27/97
PROD APP		DATE	

DO NOT SCALE DRAWING

SIZE A

125[.32] FINISH

SCALE 1:3

ALL SCREW THREADS PER ANSI 14.6
BREAK EDGES 0.020[0.05] MAX ON MACHINE WORK.
REMOVE BURRS, LOOSE SCALE AND WELD SPATTER
REFERENCE – ANSI 14.5 & B46.1

STAR

INTERPRET IN ACCORDANCE WITH ANSI Y14.5M – 1982

UNLESS OTHERWISE SPECIFIED
DIMENSIONS ARE INCHES[CM]
DECIMAL TOLERANCES
.X[.X]=±.06[.15]
.XX[.X]=±.02[.05]
.XXX[.XX]=±.004[.01]
ANGULAR TOLERANCE ±1°

Bonner Nuclear Laboratory
Rice University – Houston, Texas

STAR WBS level 2: TRIGGER

STAR WBS level 3: CTB
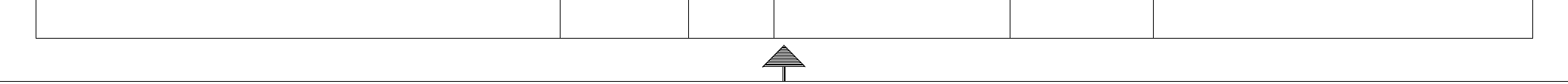
Title: TRAY SUPPORT LEFT