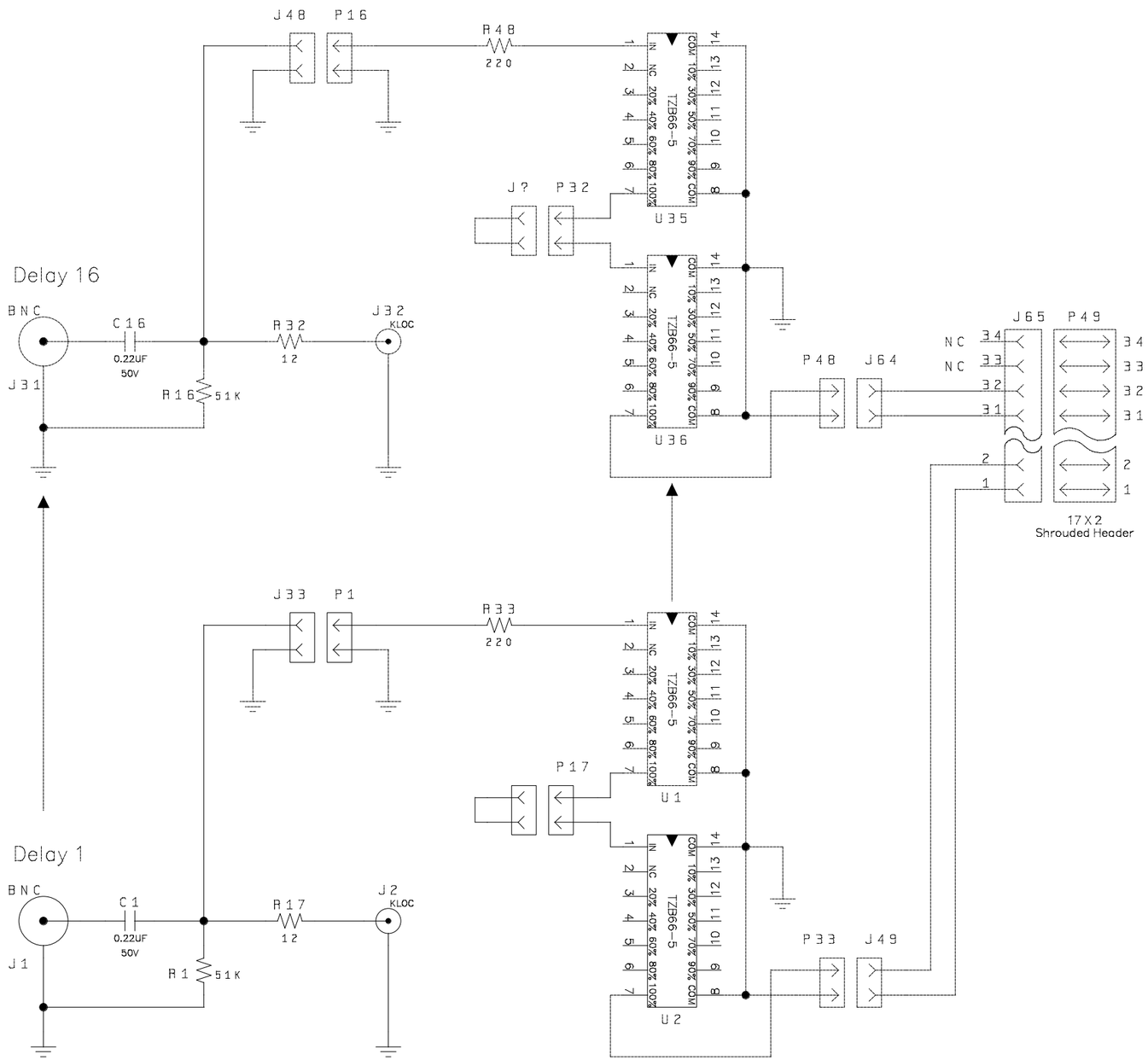

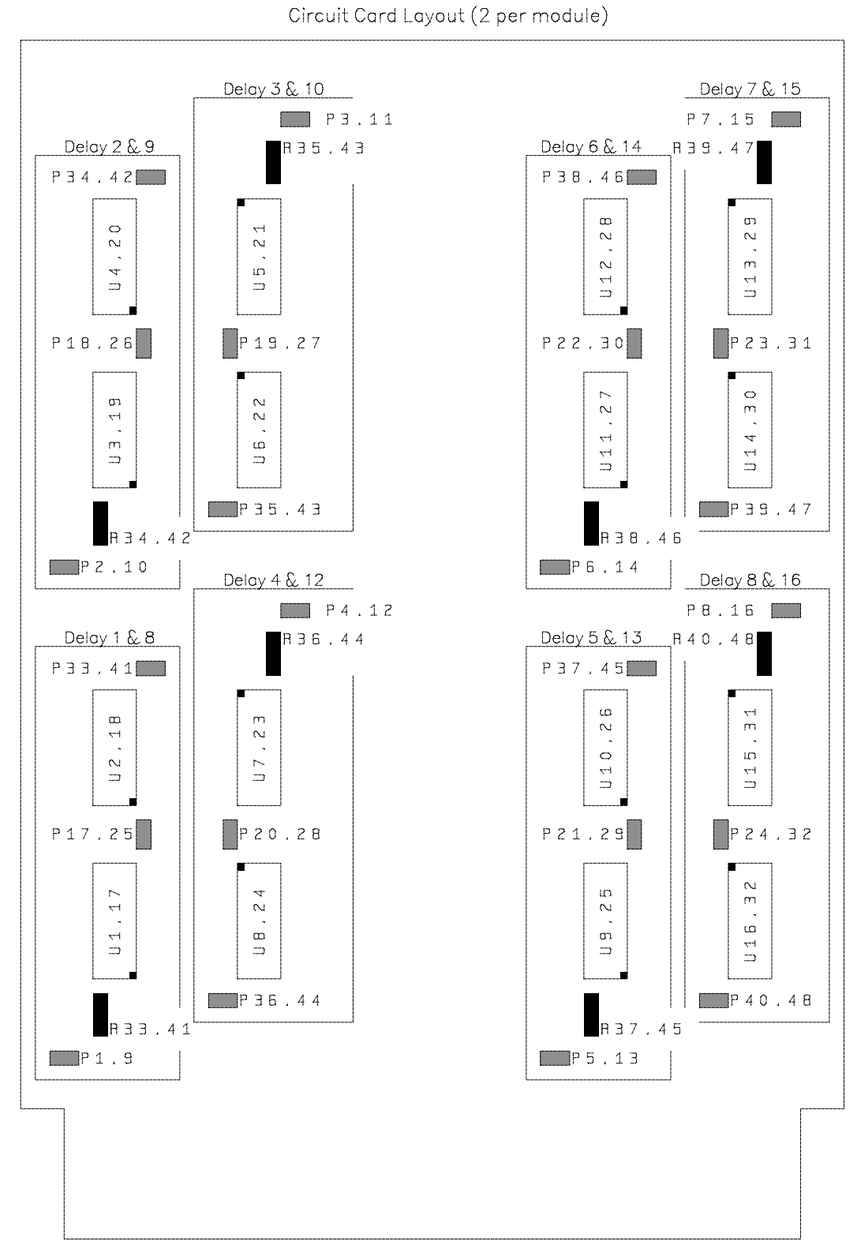

BROOKHAVEN NATIONAL LABORATORY

DATE: 11/16/01	STAR
SHEET 1 OF 1	BBC
DRAWN BY: P.Kuczewski	Delay Module
REVISION:	Instit. Dwg #:
	STAR Dwg #: