TPC Front End Electronics

FEE_1.1.1.1

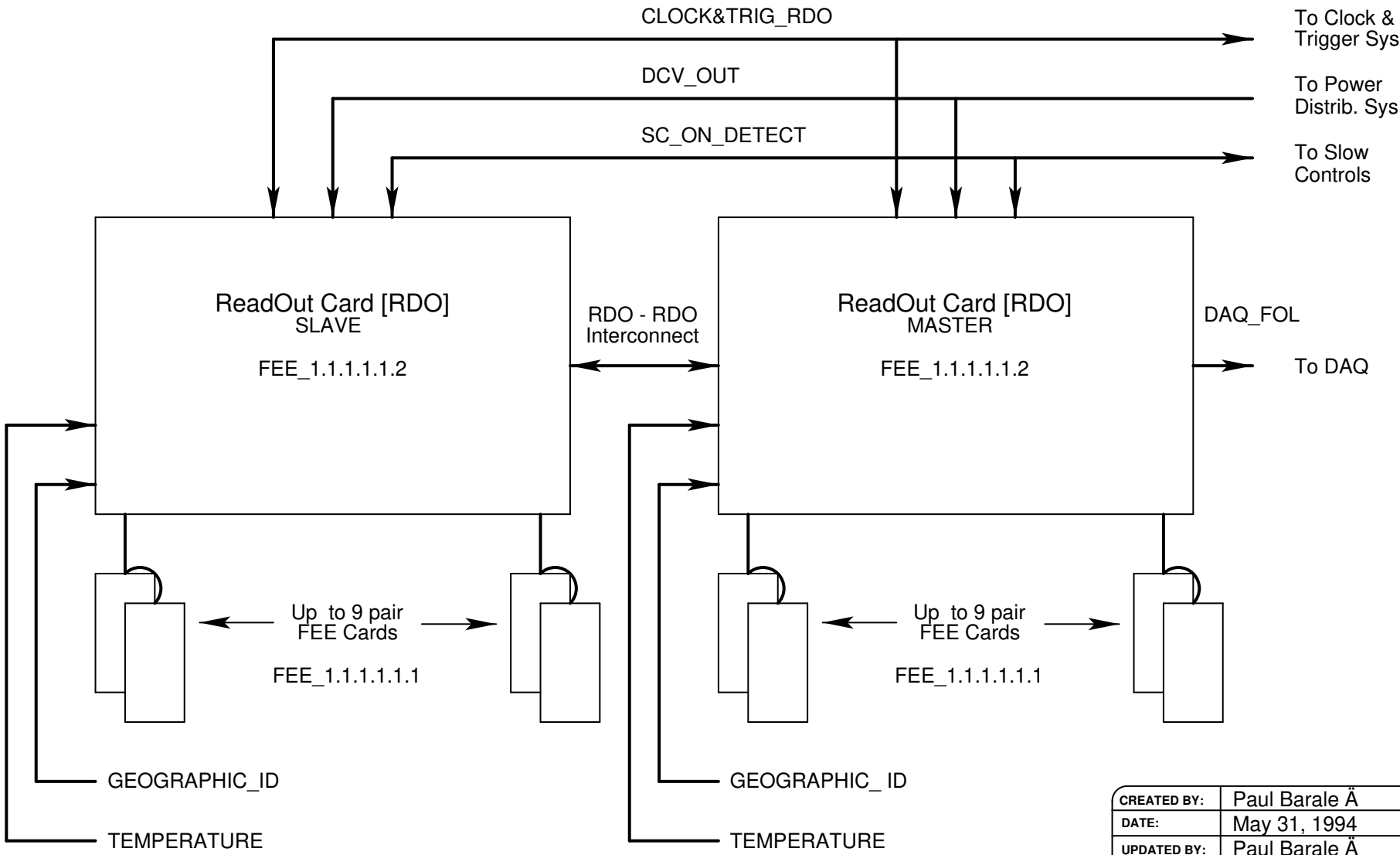

CREATED BY:	Paul Barale Ä
DATE:	May 31, 1994
UPDATED BY:	Paul Barale Ä
UPDATED:	June 2, 1994