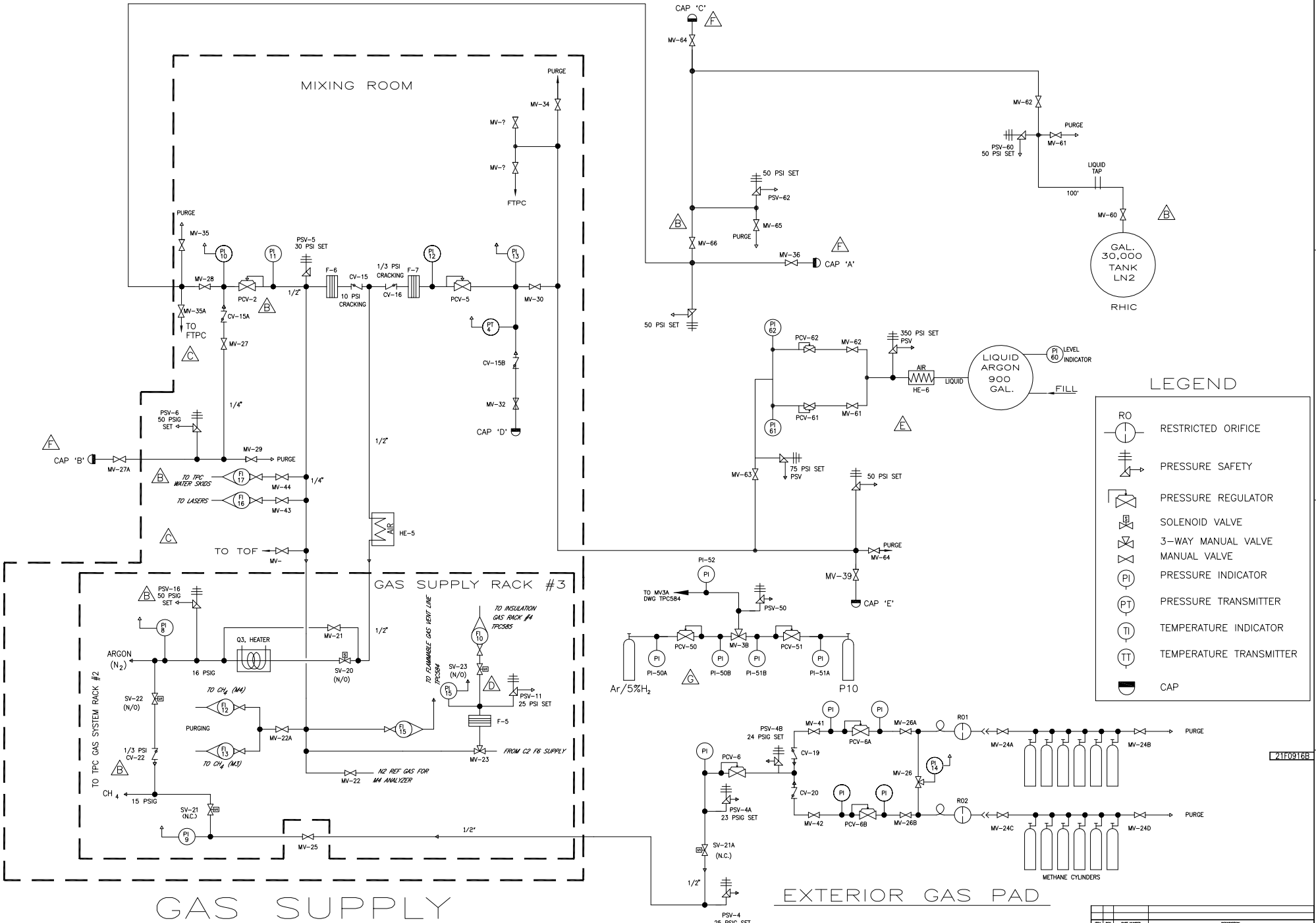

TPC586 REV. G

REV.	DWN.	CHK.	ZONE	DATE	CHANGES
G	JAS	LEONG		10/6/09	REVISIONS PER ECN #TPC586G
F	JAS	BEAVIS		2/19/09	REVISIONS PER ECN #TPC586F
E	JAS	BLAIR		10/11/02	REVISIONS PER ECN #TPC016
D	JAS	LEONG		4/2/02	REVISIONS PER ECN #TPC586D
C	JAS	BS		10/18/00	REVISIONS PER ECN #TPC015
B	JAS	BS		4/13/99	REVISIONS PER ECN #TPC586E1B
A	RW	RW		4/8/98	RELEASED FOR FABRICATION

SHOP ORDERS

APPROVALS

DRAWN BY	R. WELLS	DATE 4/8/98
CHECK BY	R. WELLS	DATE 4/8/98
PROJECTION APPROVAL		DATE
COORDINATOR ENGINEER	R.WELLS	DATE 4/8/98

ITEM	REQ	PART NUMBER	DESCRIPTION

WBS # 4.2.7	DWG SIZE E	STAR DRAWING NUMBER TPC586-E-1	REV. G
UNLESS OTHERWISE SPECIFIED ALL DIMENSIONS ARE IN INCHES.		LAWRENCE BERKELEY LABORATORY UNIVERSITY OF CALIFORNIA – BERKELEY RHIC – STAR – TPC GAS SYSTEM GAS SUPPLY SCHEMATIC	
		DETAIL 8052-27	SCALE: SR-02-07 21F0916 G