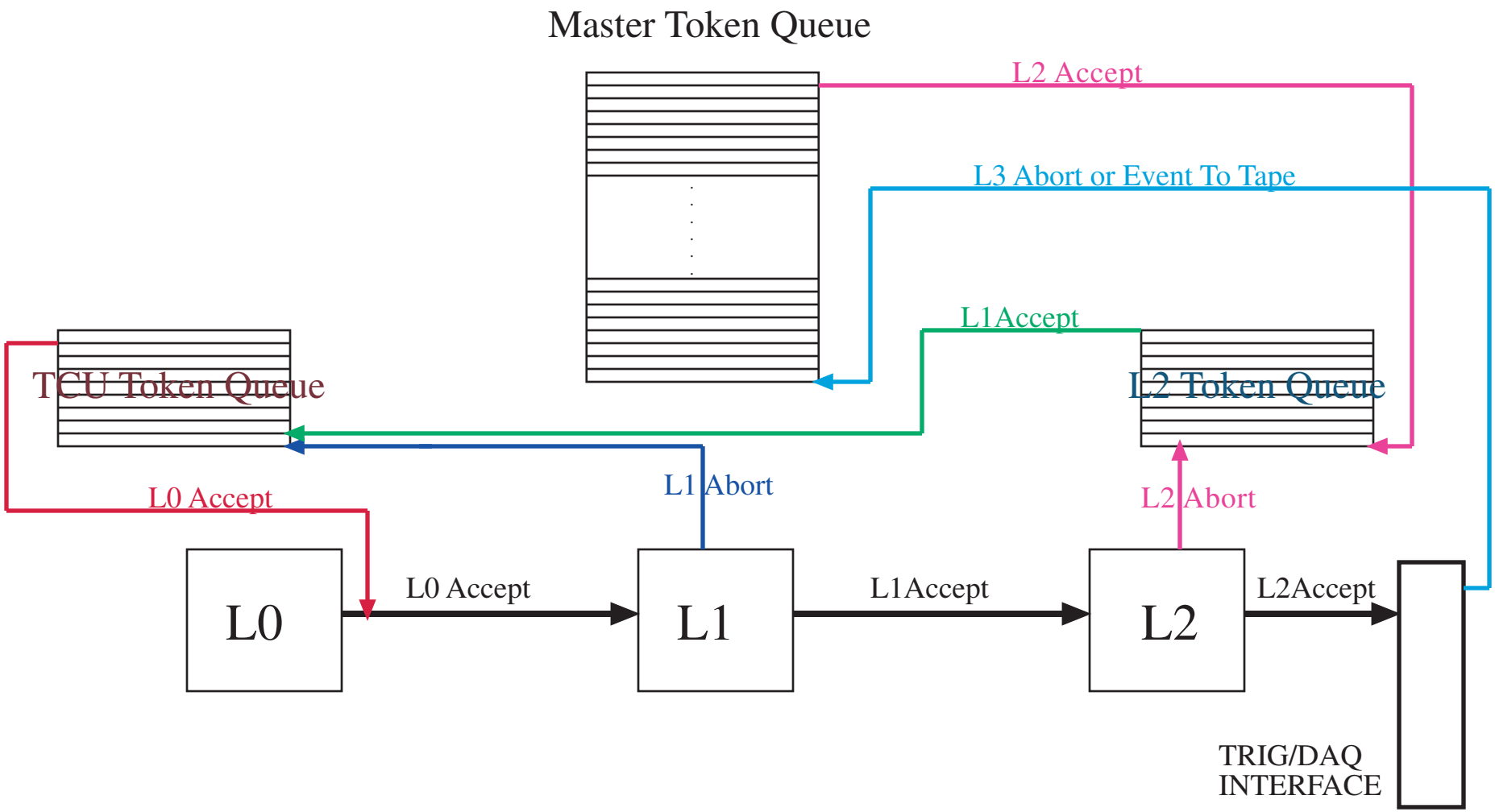
Master Token Queue
L2 Accept
L3 Abort or Event To Tape
L1Accept
TCU Token Queue
L2 Token Queue
L1 Abort
L2 Abort
L0 Accept
L0
L0 Accept
L1
L1Accept
L2
L2Accept
TRIG/DAQ
INTERFACE