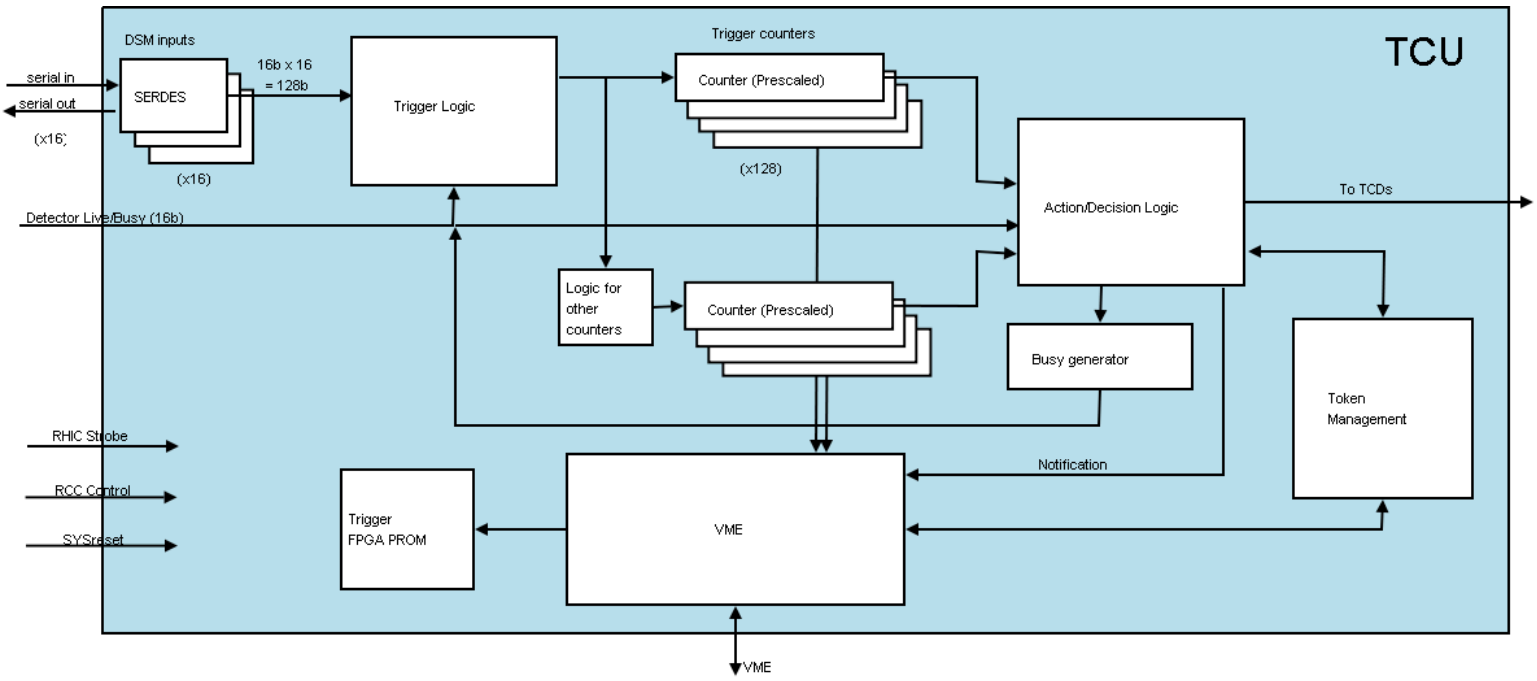
TCU
DSM inputs
serial in
serial out
(x16)
SERDES
(x16)
16b x 16
= 128b
Trigger Logic
Trigger counters
Counter (Prescaled)
(x128)
Action/Decision Logic
To TCDs
Detector Live/Busy (16b)
Logic for
other
counters
Counter (Prescaled)
Busy generator
Token
Management
RHIC Strobe
RCC Control
SYSreset
Notification
Trigger
FPGA PROM
VME
VME